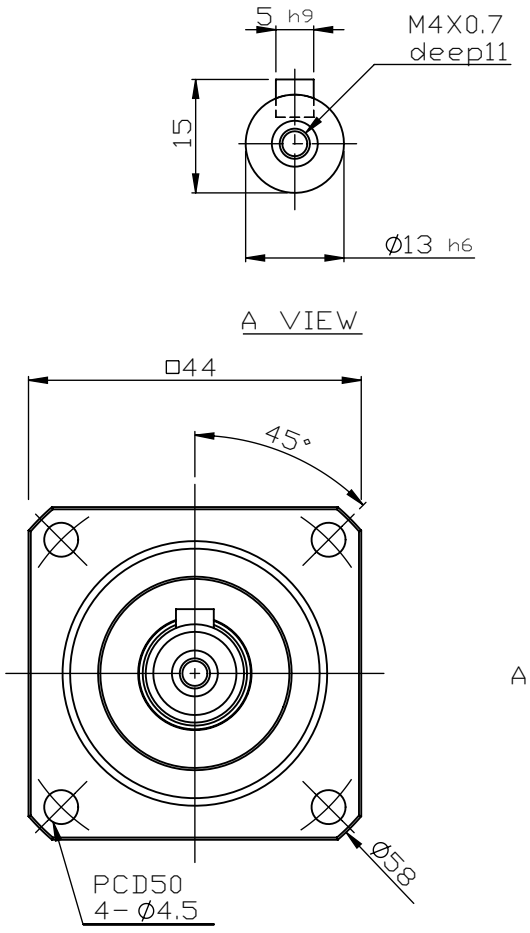

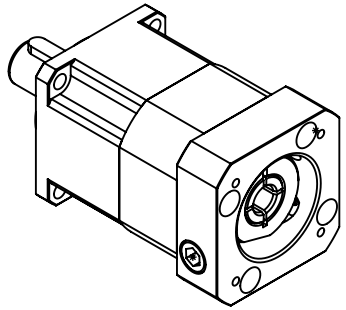

NOTES
1. Flange:7MP44A-30-A
2. Output shaft have keyway, without keyway is optional.
3. Bushing is supplied to input bore Ø5, Ø5.65, Ø6 or Ø6.35.
4. ØC: Ø8, Ø9 or Ø11.

LIMING LI MING MACHINERY CO., LTD.	VARIETY OUTLINE DIMENSION	POWER 100W~200KW		APPROVED	DATE	NO	REVISION	REVISER	DATE
	DRAWING NO. SB44-1-30M4	PATH N:\K\LM7\AS\SB-SE\		EXAMINED	DATE				
TITLE Planetary Gearhead SERVOBOX	MODEL SB-44	STAGE 1	VERSION 1.0	CHECKED	DATE				
	RATIO 3,4,5,6,7,8,9,10	UNIT mm		DRAWN MIN-LING	DATE 2011/7/12				